Click HERE to return to the Table of Contents

SAAMI
SPORTING ARMS AND AMMUNITION MANUFACTURERS' INSTITUTE, INC.
Since 1926

MAXIMUM CARTRIDGE / MINIMUM CHAMBER

30-06 SPRINGFIELD

CARTRIDGE
UNLESS OTHERWISE NOTED
BODY DIA -.008 (0.20)

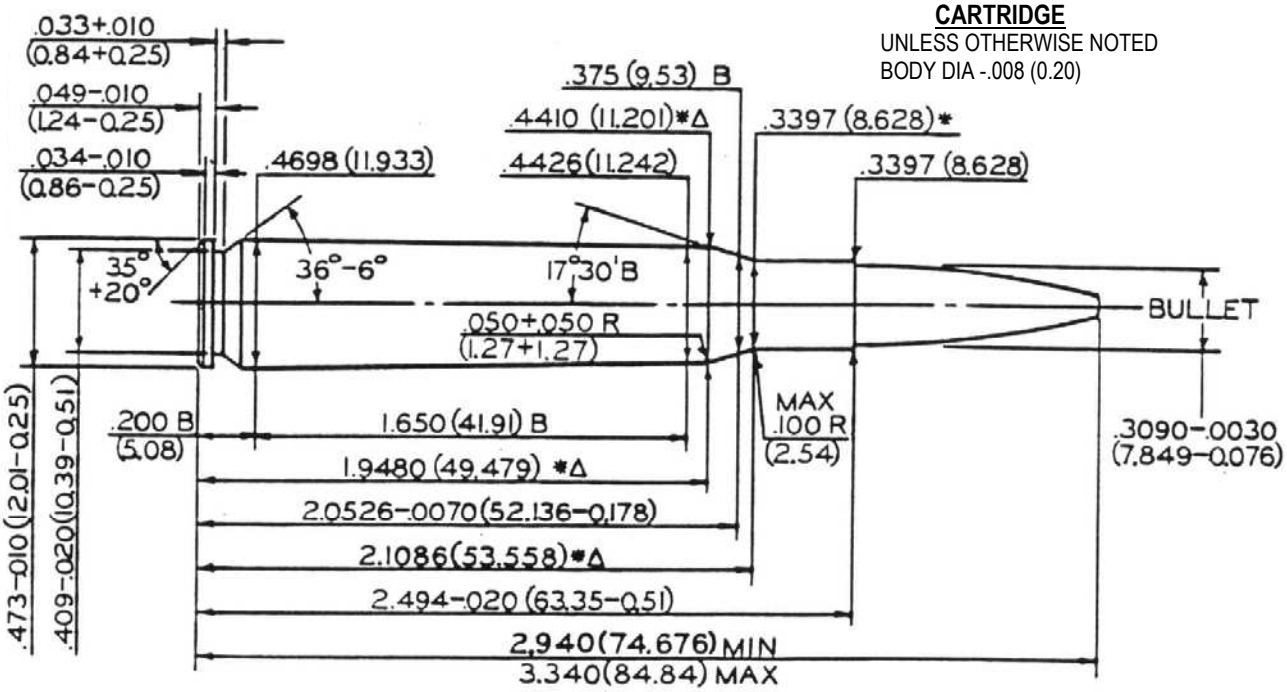

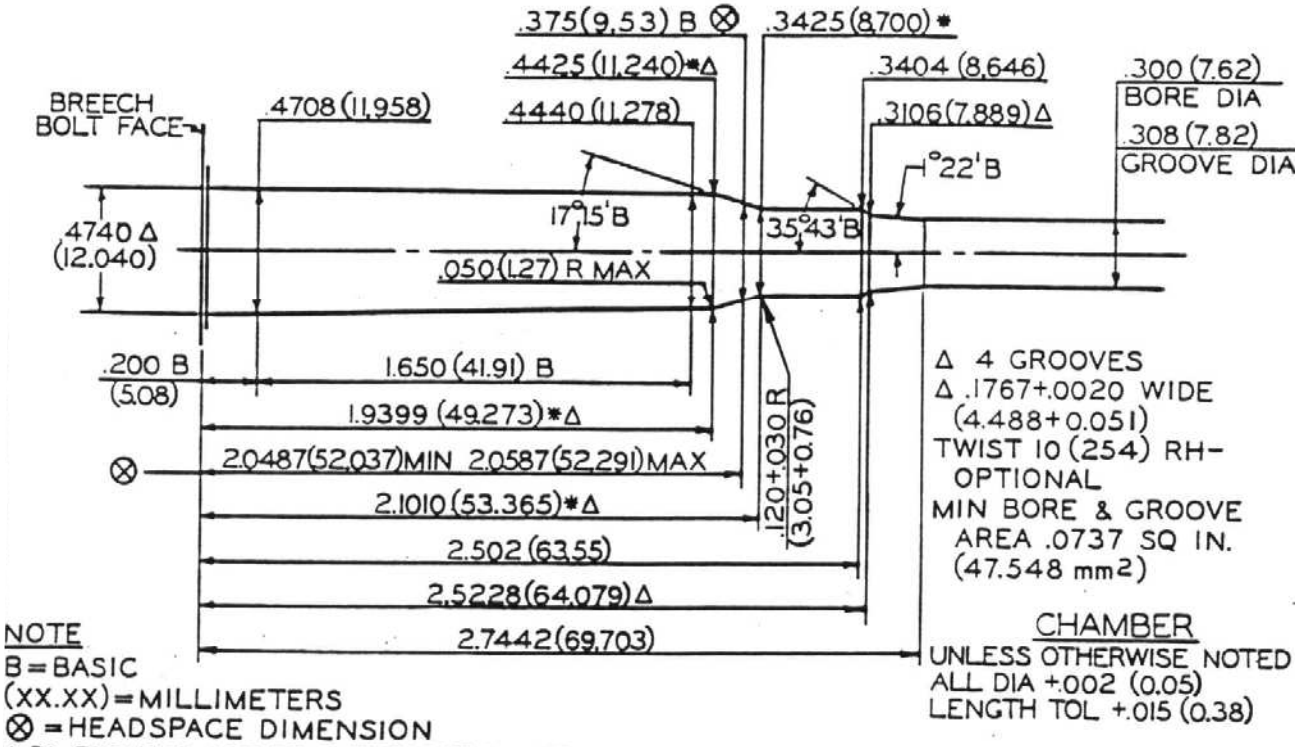

NOTE
B = BASIC
(XX.XX) = MILLIMETERS
⊗ = HEADSPACE DIMENSION
* DIMENSIONS ARE TO INTERSECTION OF LINES Δ = REFERENCE DIMENSION
ALL CALCULATIONS APPLY AT MAXIMUM MATERIAL CONDITION (MMC)

COPYRIGHT © SPORTING ARMS AND AMMUNITION MANUFACTURERS' INSTITUTE, INC. ("SAAMI"). ALL RIGHTS RESERVED.
Reproduction, republication or redistribution of SAAMI technical drawings and data sheets in any manner, in whole or in part, without SAAMI's prior written consent is prohibited.