(8.58 x 71mm) 338 Lapua

The 338 Lapua was originally designed for military use as a long-range sniper round. It is based on a modified 416 Rigby case. The cartridge gave excellent accuracy at long range and as such has seen most of its use in competition or tactical situations. It has also seen use by hunters looking for a powerful medium-bore caliber. Sako has chambered rifles for it as well as a number of custom or semi-custom rifle builders. The performance level of the 338 Lapua is on par with other large capacity 338 cartridges such as the 338 Remington Ultra Mag and the 340 Weatherby Magnum. To master calibers such as these, practice will be needed as recoil is rather heavy. In our testing, we found that Vihtavuori N560 did very well with lighter weight bullets. Ramshot Magnum and Hodgdon US 869 did very well with heavier weight bullets.

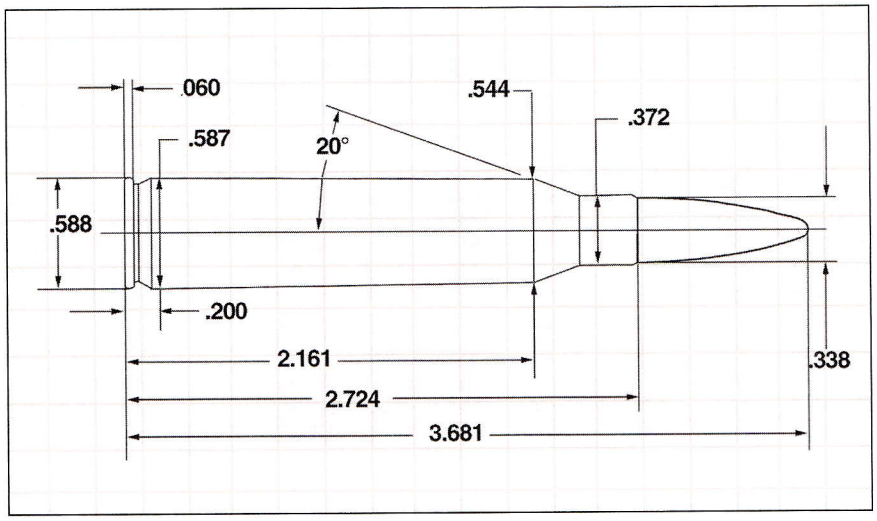

Test Components:

Cases .....Lapua
Trim-to Length .....2.714"
Primers .....Federal 215
Primer Size .....Large Rifle, Magnum
Norma Shell Holder .....No. 17
Jacketed Bullets Used .Nosler AccuBond #57625, 180 gr.
Swift Scirocco, 210 gr.
Hornady SP #3335, 250 gr.
Swift A-Frame, 275 gr.
Sierra HPBT #9300, 300 gr.

Test Specifications:
(Velocity & Pressure)

Firearm Used .....Universal Receiver
Barrel Length .....24"
Twist .....1-10"
Groove Dia. .....338"

180 gr. Jacketed AccuBond — **BC:** .372
3.620" OAL — **SD:** .225

Powder	Sugg. Starting Grains	Velocity fps	Pressure P.S.I.	Max Load Grains	Velocity fps	Pressure P.S.I.
RX19	90.0	3253	56,000	97.0	3418	62,200
H-4831SC	93.0	3173	55,500	99.0	3308	61,000
N560	94.0	3265	55,500	**100.5**	**3449**	**62,200**
IMR-7828	94.5	3225	55,400	101.0	3411	62,000
Magnum	97.0	3112	54,800	104.0	3301	62,100

210 gr. Jacketed Scirocco — **BC:** .507
3.600" OAL — **SD:** .263

Powder	Sugg. Starting Grains	Velocity fps	Pressure P.S.I.	Max Load Grains	Velocity fps	Pressure P.S.I.
RX19	83.0	2995	55,200	90.0	3167	62,000
N560	**88.0**	**3070**	**57,200**	95.0	3217	62,500
H-4831SC	83.0	2921	55,500	88.0	3072	62,100
AA-3100	83.0	2956	55,200	91.0	3108	61,500
IMR-7828	86.0	2956	54,200	93.0	3106	59,500
Magnum	95.0	2981	57,900	100.0	3095	61,900

Note: Loads shown in shaded panels are maximum.
Loads shown in bold designate potentially most accurate load.